CRYPTERA EPP 1218

PCI 5.x APPROVED

ENCRYPTING PIN PAD

OEM ENCRYPTING PIN PAD FOR:

- Automatic Teller Machines (ATMs)
- Unattended Payment Solutions
  - Petrol forecourt payment
  - Ticket vending machines
  - Kiosk solutions
  - Parking venues

- PCI 5.x Approved PIN Pad
- Polymer Keyboard
- Stainless Steel Keys
- Customised Layouts
- 3DES and Remote Key Load Support
- USB Bus Powered
- Built In Beeper
- Removal Sensor

CRYPTERA®
A DIEBOLD NIXDORF COMPANY

CRYPTERA EPP 1218

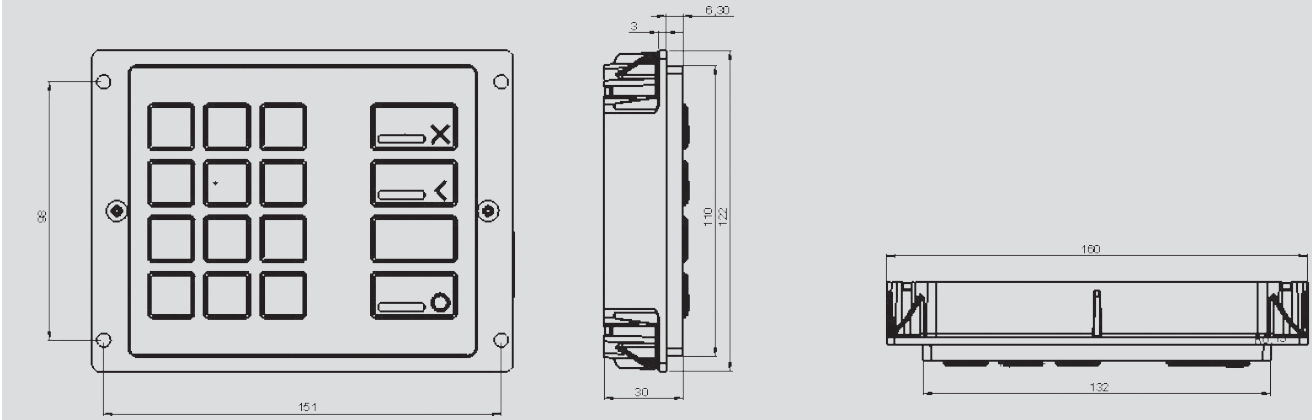

KEYBOARD

- Stainless steel keys in a polymer frame
- All keyboard text is black. Function keys can have coloured bars
- Keys are raised and comply with current disability standards
- Embossing (XOI<) is an available option
- Keyboard lifetime is two million cycles

ELECTRICAL INTERFACES

- Power supply: USB Bus Powered
- External keyboard: Connector for 2 x 4 function keys
- Built in Beeper: Software Controlled
- LEDs: Three internal LEDs for diagnostics

MECHANICAL INTERFACE

Fits into the front panel of many standard ATMs

ENVIRONMENT

- Keyboard is watertight when correctly mounted in the ATM
- IP65 (from front of keyboard)
- Keyboard temperature range is -25°C to +65°C
- Vandal resistance: IK07
- Device is CE approved
- Device is ROHS compliant

APPROVALS

PCI 5.x Approved

SOFTWARE INTEGRATION

- Supports Flexible Activation Procedure
- Remote Key Load (optional)
- XFS service provider available
- Cryptera protocol software

Scan the code with your smartphone and get more information about Cryptera

Marts 2020 CRYPTERA EPP 1218

CRYPTERA A/S
Fabriksparken 20
DK-2600 Glostrup
Phone: + 45 4343 4395
info@cryptera.com
www.cryptera.com

CRYPTERA®
A DIEBOLD NIXDORF COMPANY